DRAWING SYMBOL KEY:

1. New door per Schedule.
2. New window per Schedule.
3. New wall.
4. New foundation or pier.
5. New flooring per Schedule.
6. New kitchen cabinets per drawings and specifications.
7. New vanity with integral sink.
8. New toilet, sink, tub, or shower - see mechanical drawings.
9. New concrete stair - see structural drawings.
10. New handrail.
11. New concrete slab over new vapor barrier.
12. New solid masonry infill at opening in foundation.
13. New concrete walkway.
14. New infill floor framing and sheathing.
15. New Perimeter under drain.
16. New Floor Drain.
17. New Wood Framed Stairs.
18. New Columns and Footing - See Structural Drawings.
19. Thickened Slab - See Structural Drawings.

NEW WORK FLOOR PLAN KEY

EXISTING WALL

NEW WALL

NEW DOOR/FRAME

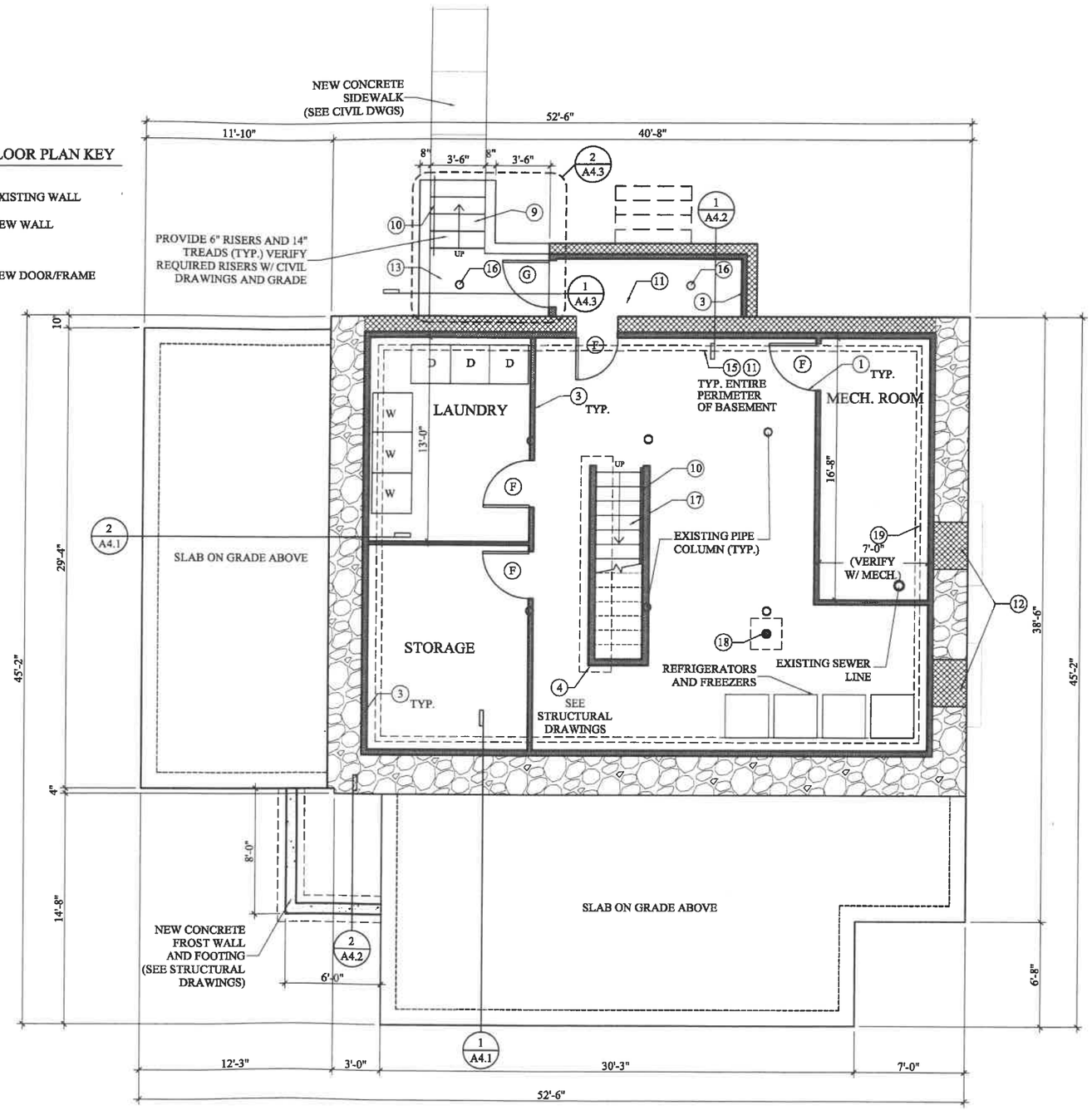

1 PROPOSED BASEMENT PLAN
SCALE: 1/8" = 1'-0"

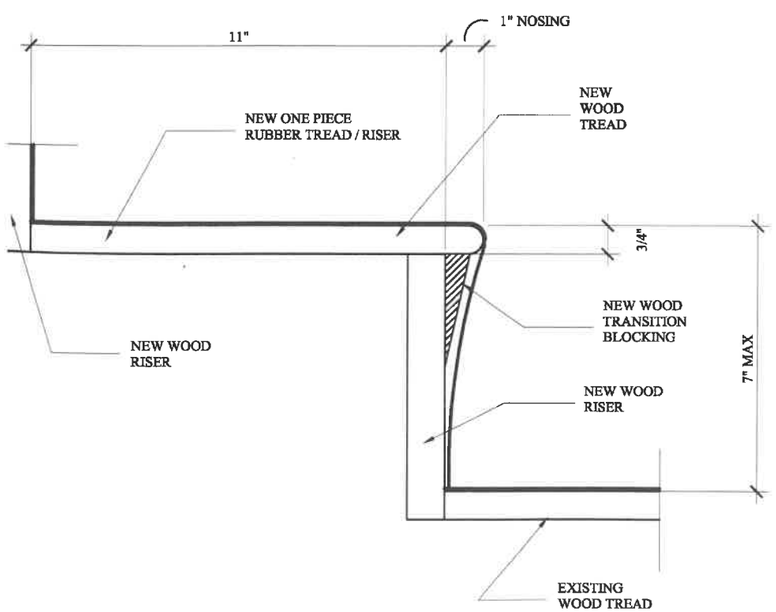

2 BASEMENT STAIR TREAD DETAIL
SCALE: 3" = 1'-0"

Howard Center

322 St. Paul Street
Burlington, VT 05401

ARCHITECT:

S2 Architecture P.C.
5224 Shelburne Rd.
Shelburne VT, 05482
Tel: (802) 985-5595
Fax: (802) 985-5565

CIVIL ENGINEER:

Krebs and Lansing Consulting Engineers, Inc.
164 Main Street
Colchester, VT 05446
Tel: (802) 878-0375
Fax: (802) 878-9618

STRUCTURAL ENGINEER:

J.I.H. Structural Engineering, Inc.
10 Athens Drive
Essex Jct., VT 05452
Tel: (802) 878-3504
Fax: (802) 878-3504

MECHANICAL ENGINEER:

Innovative Consulting Engineering
P. O. Box 56
North Montpelier, VT 05666
Tel: (802) 454-464
Fax: (802) 454-4601

ELECTRICAL ENGINEER:

AMG Electrical Design
310 Windywood Road
Barre, VT 05641
Tel: (802) 476-9432
Fax: (802) 476-4583

FIRE PROTECTION:

RN Culver Consulting, Inc.
142 Sand Hill Road
Essex Junction, VT 05452
Tel: (802) 878-8240
Fax: (802) 878-9813

LICENSED ARCHITECT
STEVEN A. SCHNEIDER
No. 1784
STATE OF VERMONT

DATE: 05.09.11

REVISIONS

PROPOSED PLANS

A2.1

DRAWING SYMBOL KEY:

1. New door per Schedule.
2. New window per Schedule.
3. New wall.
4. New foundation or pier.
5. New flooring per Schedule.
6. New kitchen cabinets per drawings and specifications.
7. New vanity with integral sink.
8. New toilet, sink, tub, or shower - see mechanical drawings.
9. New concrete stair - see structural drawings.
10. New handrail.
11. New concrete slab over new vapor barrier.
12. New solid masonry infill at opening in foundation.
13. New concrete walkway.
14. New infill floor framing and sheathing.
15. New Perimeter under drain.
16. New Floor Drain.
17. New Wood Framed Stairs.
18. New Decking over New Membrane and New plywood sheathing.
19. New painted GWB soffit.
20. Modify Rough Opening to accomodate new 2'-10" wide outswing

NEW WORK FLOOR PLAN KEY

EXISTING WALL

NEW WALL

NEW DOOR/FRAME

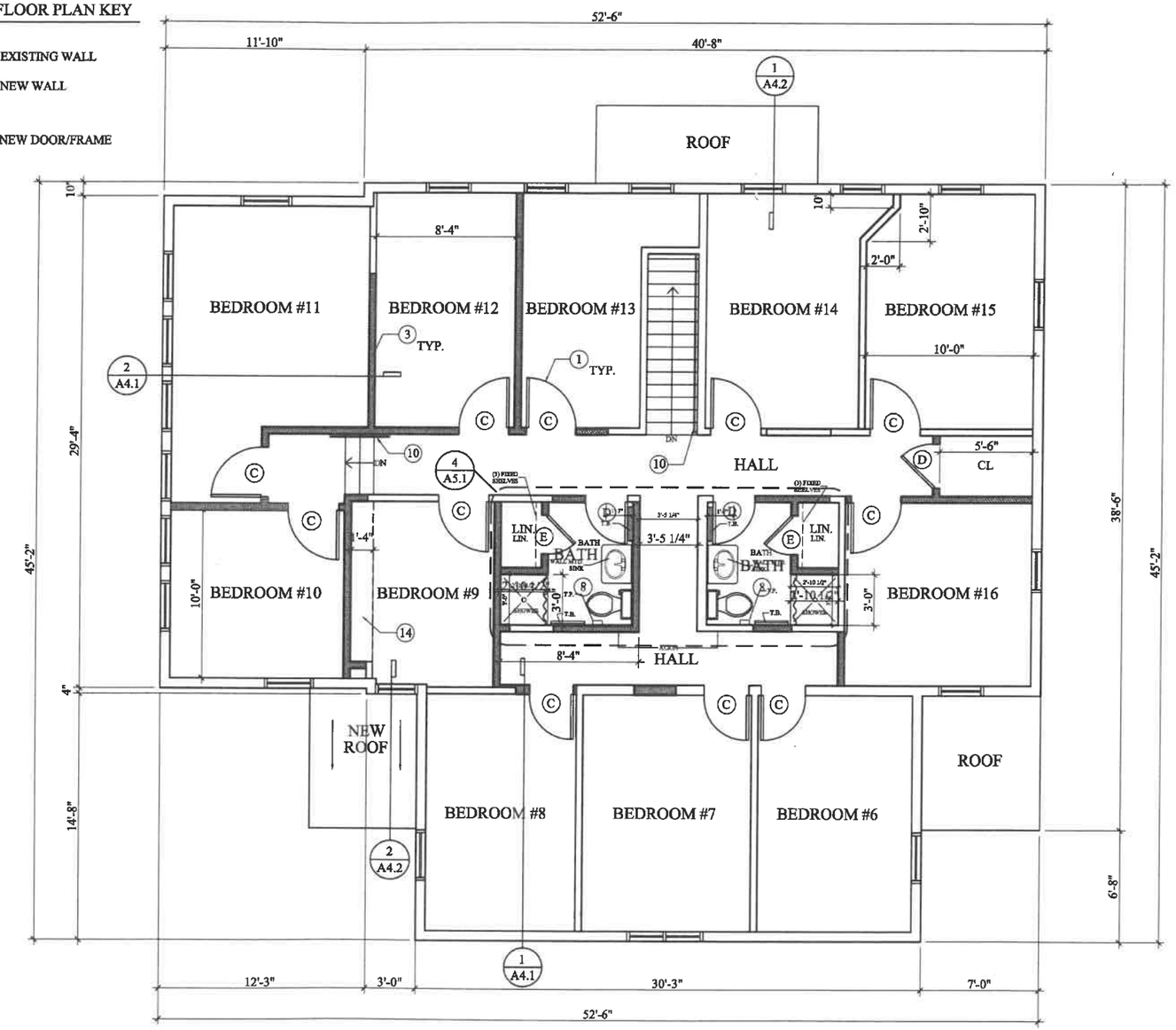

1 PROPOSED 2ND FLOOR PLAN
SCALE: 1/8" = 1'-0"

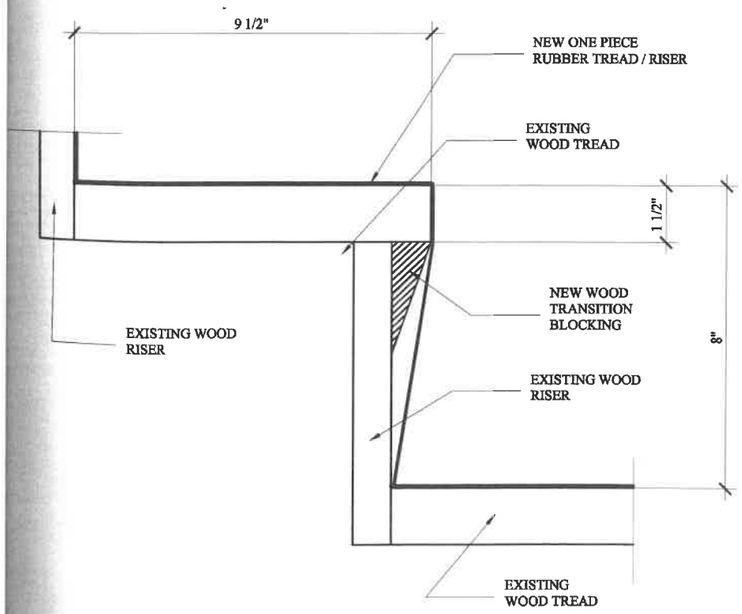

2 1ST/2ND FLOOR STAIR TREAD DETAIL
SCALE: 3" = 1'-0"

Howard Center

322 St. Paul Street
Burlington, VT 05401

ARCHITECT:

S2 Architecture P.C.
5224 Shelburne Rd.
Shelburne VT, 05482
Tel: (802) 985-5595
Fax: (802) 985-5565

CIVIL ENGINEER:

Krebs and Lensing Consulting Engineers, Inc.
164 Main Street
Colchester, VT 05446
Tel: (802) 878-0375
Fax: (802) 878-9618

STRUCTURAL ENGINEER:

J.L.H. Structural Engineering, Inc.
10 Athens Drive
Essex Jct., VT 05452
Tel: (802) 878-3504
Fax: (802) 878-3504

MECHANICAL ENGINEER:

Innovative Consulting Engineering
P. O. Box 56
North Montpelier, VT 05666
Tel: (802) 454-464
Fax: (802) 454-4601

ELECTRICAL ENGINEER:

AMG Electrical Design
310 Windywood Road
Barre, VT 05641
Tel: (802) 476-9432
Fax: (802) 476-4583

FIRE PROTECTION:

RN Culver Consulting, Inc.
142 Sand Hill Road
Essex Junction, VT 05452
Tel: (802) 878-8240
Fax: (802) 878-9813

LICENSED ARCHITECT
STEVEN A. SCHINKEL
No. 1784
STATE OF VERMONT

DATE: 05.09.11

REVISIONS

PROPOSED PLANS

A2.3

DRAWING SYMBOL KEY:

1. New door per Schedule.
2. New window per Schedule.
3. New wall.
4. New foundation or pier.
5. New flooring per Schedule.
6. New kitchen cabinets per drawings and specifications.
7. New vanity with integral sink.
8. New toilet, sink, tub, or shower - see mechanical drawings.
9. New concrete stair - see structural drawings.
10. New handrail.
11. New concrete slab over new vapor barrier.
12. New solid masonry infill at opening in foundation.
13. New concrete walkway.
14. New infill floor framing and sheathing.
15. New Perimeter under drain.
16. New Floor Drain.
17. New Wood Framed Stairs.
18. New Decking over New Membrane and New plywood sheathing.
19. New painted GWB soffit.
20. Modify Rough Opening to accomodate new 2'-10" wide outswing door. keep existing transom over new door (typ.)

NOTES ON CEILING HEIGHTS:

All Bathrooms, Office #1, and Hallways on the first floor shall have a dropped ceiling similar to FC4 on Sheet A0.1 to allow for Ductwork and Piping.

NEW WORK FLOOR PLAN KEY

EXISTING WALL

NEW WALL

NEW DOOR/FRAME

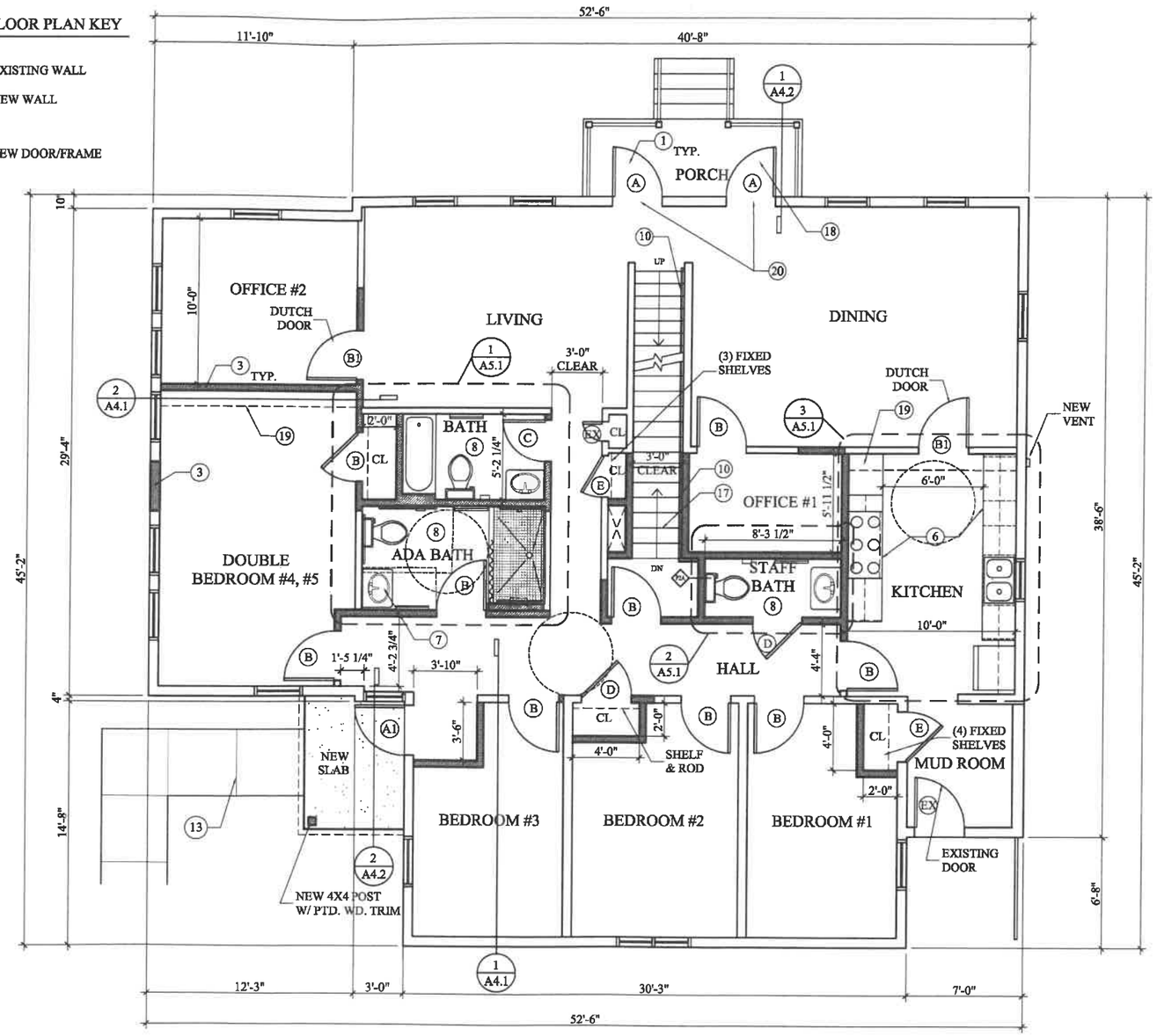

1 PROPOSED 1ST FLOOR PLAN

SCALE: 1/8" = 1'-0"

Howard Center

322 St. Paul Street
Burlington, VT 05401

ARCHITECT:

S2 Architecture P.C.
5224 Shelburne Rd.
Shelburne VT, 05482
Tel: (802) 985-5595
Fax: (802) 985-5565

CIVIL ENGINEER:

Krebs and Lensing Consulting Engineers, Inc.
164 Main Street
Colchester, VT 05446
Tel: (802) 878-0375
Fax: (802) 878-9618

STRUCTURAL ENGINEER:

J.L.H. Structural Engineering, Inc.
10 Athens Drive
Essex Jct., VT 05452
Tel: (802) 878-3504
Fax: (802) 878-3504

MECHANICAL ENGINEER:

Innovative Consulting Engineering
P. O. Box 56
North Montpelier, VT 05666
Tel: (802) 454-464
Fax: (802) 454-4601

ELECTRICAL ENGINEER:

AMG Electrical Design
310 Windywood Road
Barre, VT 05641
Tel: (802) 476-9432
Fax: (802) 476-4583

FIRE PROTECTION:

RN Culver Consulting, Inc.
142 Sand Hill Road
Essex Junction, VT 05452
Tel: (802) 878-8240
Fax: (802) 878-9813

LICENSED ARCHITECT
STEVEN A. SCHENKER
No. 1784
STATE OF VERMONT

DATE: 05.09.11

REVISIONS

PROPOSED PLANS

A2.2